Mobile Millennium Demonstration - Participatory Traffic Estimation Using Mobile Phones

Daniel B. Work*, Ryan Herring†, Aude Hofleitner*, and Alexandre M. Bayen*
*Systems Engineering, Department of Civil and Environmental Engineering
†Department of Industrial Engineering and Operations Research
University of California, Berkeley, CA, 94720-1710

***Abstract*—The mobile internet is changing the face of the transportation cyberphysical system at a rapid pace. In the last five years, cellular phone technology has leapfrogged several attempts to construct dedicated infrastructure systems to monitor traffic. Today, GPS equipped smartphones are progressively morphing into a ubiquitous traffic monitoring system where users contribute and receive traffic information in real time. *Mobile Millennium* is a pilot project of such a technology which allows the general public with supported devices to participate.**

I. Introduction

Researchers from Nokia Research Center Palo Alto, Navteq, and UC Berkeley, with support from Caltrans and US DOT, have built a traffic monitoring system using mobile devices, known as *Mobile Millennium*. The Mobile Millennium project [1], officially launched on November 10, 2008, is an early instantiation of participatory sensing in the form of a traffic monitoring system system which collects traffic data from GPS-equipped mobile phones to estimate traffic conditions in real-time. The traffic conditions are then broadcast back to the users' mobile phones, enabling commuters to make more intelligent route and trip decisions. The deployment area is focused on commuters in Northern California, including the San Francisco Bay Area and Sacramento, which are areas with heavy recurring congestion on many of the roadways. The project is a follow up of the *Mobile Century* experiment, in which 165 UC Berkeley graduate students were hired to drive a 10 mile loop of I880 in California for a day, demonstrating the feasibility of a real-time traffic estimation service using GPS enabled devices only [2].

Mobile Millennium significantly increases the scale and scope of this work by demonstrating the first real-time permanent monitoring system capable of using GPS data from thousands of mobile devices, as well as existing fixed traffic sensors such as inductive loop detectors embedded in the pavement, to construct velocity fields and travel time estimates. While the previous experiment focused on highway traffic estimation on a single segment of highway, Mobile Millennium aims to estimate traffic on all major highways in and around the target area, as well as on major arterial roads which achieve sufficient user penetration.

II. Demonstration Description

The proposed demonstration consists of two main components, shown in Fig. 1.

- *Nokia Phones running the Mobile Millennium Traffic Client*. These phones will be running the production traffic client which is publicly available for download. It displays traffic information on highways by combining traffic estimates from Berkeley and Navteq.
- *Interactive Touch-Screen Display running the Mobile Millennium Traffic Viewer.* In addition to highway traffic data, the Mobile Millennium traffic viewer shows the current state of traffic on arterials. The viewer is run on a large touch screen display, which allows users to drag and zoom the map to see more information.

This display of traffic information is particularly relevant for the CPS Forum since it highlights the potential impact of cyberphysical systems research to meet societal needs.

An important cyberphysical research challenge addressed by Mobile Millennium is the design of a privacy aware cyberphysical system in which the location and availability of the sensors (*i.e.* phones) are not under the control of the system. A second research challenge is the design of scalable estimation algorithms which can process the information in real-time, both on highways and arterials. Both will be discussed during the demonstration.

III. Cyberphysical System Architecture

The system architecture which supports this research (shown in Fig. 2) consists of a physical component: GPS-enabled smartphones onboard vehicles (driving public), and three cyber components: a cellular network operator (network provider), cellular phone data aggregation and traffic service provision (Nokia/Navteq), and traffic estimation (Berkeley/Navteq). On each participating mobile device (or client), an application is executed which is responsible for collecting traffic data through a privacy aware spatial sampling technique based on *Virtual Trip Lines* (VTLs) [3], and displaying the current traffic estimates which are produced from the aggregate data of all participants.

A back end server aggregates data from a large number of mobile devices and pushes the data to UC Berkeley estimation engine for data assimilation, which combines the cell phone data with other information such as loop detectors to produce the best estimate of the current state of traffic. The map data server provides the Navteq Navstreets digital map data which is required for the network based traffic flow models. Multiple estimation algorithms are run in parallel as part

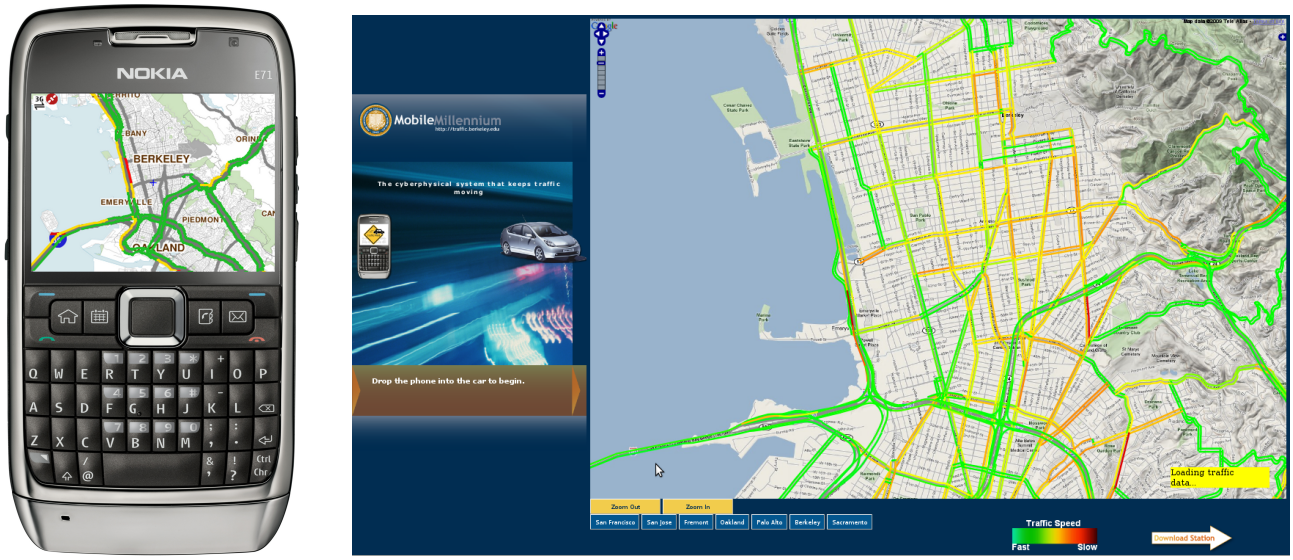

(a) (b)

Figure 1. Demonstration Items: (a) Mobile Millennium Traffic Client running on a Nokia E71 phone displays real-time highway traffic. Several phones will be available at the demonstration. (b) Screenshot of the Mobile Millennium Traffic Viewer, to be shown on a large touch screen display. Users can drag the map to view real-time highway and arterial traffic in the Bay Area.

of ongoing research, including arterial traffic models. An estimate manager in the traffic estimation server monitors the performance of the various algorithms and transmits the results to the traffic report server. The estimates are integrated with estimates from traffic models provided by Navteq before being transmitted back to the mobile device.

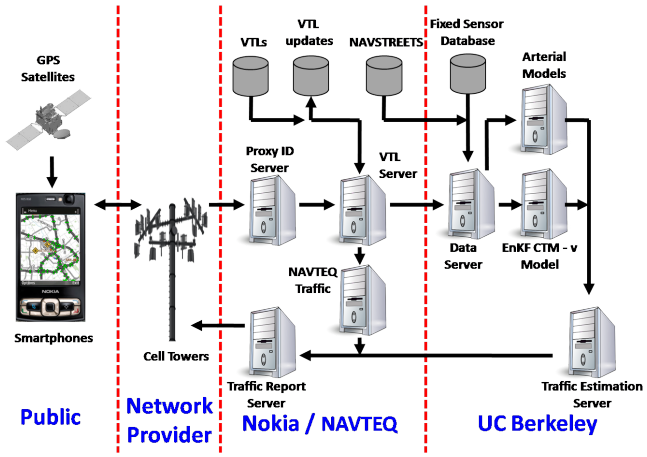

Figure 2. System architecture overview. The system consists of vehicles equipped with GPS-enabled smartphones, a cellular network provider, data collection infrastructure and traffic information provision, and traffic estimation algorithms.

IV. Traffic Estimation

The velocity field $v(x,t)$ on a highway segment $x \in [0, L]$ is a distributed parameter system in space. Vehicles labeled by $i \in \mathbb{N}$ travel along the highway with trajectories $x_i(t)$, and measure the velocity $v(x_i(t), t)$ along their trajectories. These measurements are used to reconstruct the function $v(x,t)$, in a process referred to as *data assimilation* or *inverse modeling*. The technique used to perform data assimilation with this sampling is based on *Ensemble Kalman Filtering* (EnKF), which is applied to a discrete velocity evolution equation. Field experiments have been used to validate this method.

For arterial traffic, Mobile Millennium blends VTL data collected from the phones with Navteq historical data collected from fleet vehicles. At any given time, the real-time measurements cover only a fraction of the road network. These sparse measurements are aggregated over time and a probabilistic model is constructed to recognize traffic patterns. The real-time system then uses any current VTL measurements and the correlations between road segments to produce an estimate of the current travel time along all segments (including those with no current measurements). Road features are used to classify roads in order to reduce the number of distinct probability distributions required to be determined. Maximum likelihood estimation is used to determine the relevant weights for various features, which can then be used for to infer the most likely state of the system given the real-time data.

References

[1] http://traffic.berkeley.edu/.

[2] D. Work, O.-P. Tossavainen, S. Blandin, A. Bayen, T. Iwuchukwu, and K. Tracton, "An ensemble Kalman filtering approach to highway traffic estimation using GPS enabled mobile devices," in *Proc. of the 47th IEEE Conference on Decision and Control*, (Cancun, Mexico), pp. 2141–2147, December 2008.

[3] B. Hoh, M. Gruteser, R. Herring, J. Ban, D. Work, J.-C. Herrera, A. Bayen, M. Annavaram, and Q. Jacobson, "Virtual trip lines for distributed privacy-preserving traffic monitoring," in *6th International Conference on Mobile Systems, Applications, and Services*, (Breckenridge, CO), pp. 15–28, June 17-18 2008.